Specifications

DESCRIPTION
- Metal construction with chrome plated and LifeShine® brushed nickel finishes
- 3/4" IPS connection
- Includes 7" rainshower showerhead, arm and flange
- For use with S936 3/4" thermostatic valve and S956 volume control valve with integral checkstops

OPERATION
- Flow lever operates counterclockwise through a 90 degree arc with off at 6 o'clock and maximum flow at the 3 o'clock position. Shut off in clockwise direction
- Temperature lever operates through a 340 degree arc with maximum cold at full clockwise rotation and maximum hot at full counterclockwise rotation
- Safety stop preset temperature at 105 degrees F (41degrees C)
- Safety stop override allows maximum temperature at 120 degrees F (49 degrees C)
- Factory established temperature range from 70 degrees F (21 degrees C) to 120 degrees F (49 degrees C)

FLOW
- Showerhead is limited to 2.5 gpm (9.5 L/min)

CARTRIDGE
- 130156 thermostatic cartridge design with non metallic/nonferrous materials
- 130157 volume ceramic disc cartridge design

STANDARDS
- Third party certified to meet CSA B-125, ASME A112.18.1M and all applicable requirements referenced therein including ASSE1016

WARRANTY
- Lifetime limited warranty against leaks, drips and finish defects to the original consumer purchaser
- 5 year warranty if used in commercial installation

ADA

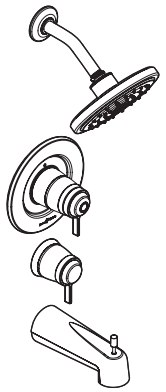

Solace™

ExactTemp® 3/4" Thermostatic Tub/Shower Trim

Models: TS3716, TS3716BN

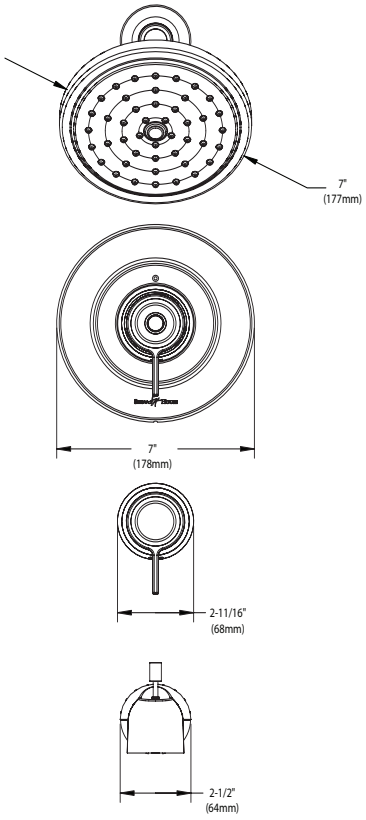

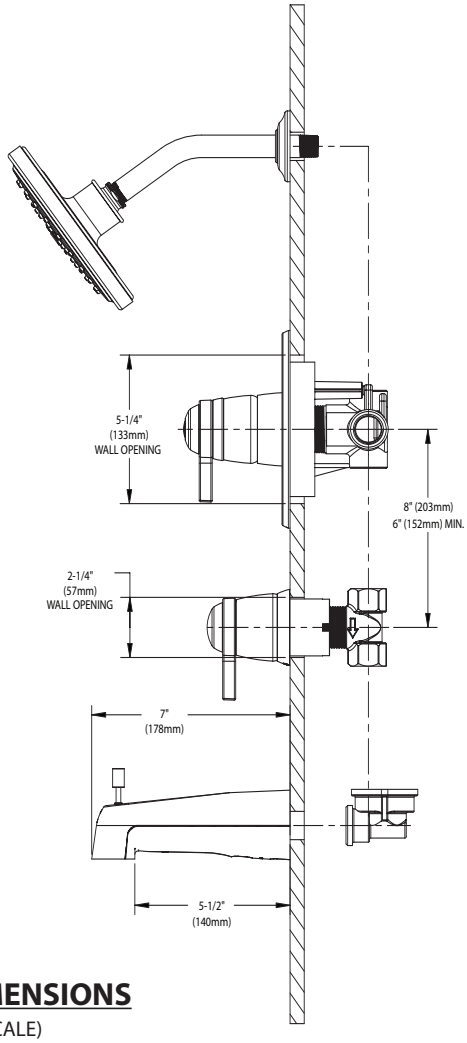

CRITICAL DIMENSIONS

(DO NOT SCALE)