Home Office
American Crossings
69088
69090
Urban Crossings
69188
69190
Woodlands Oak
69288
69290

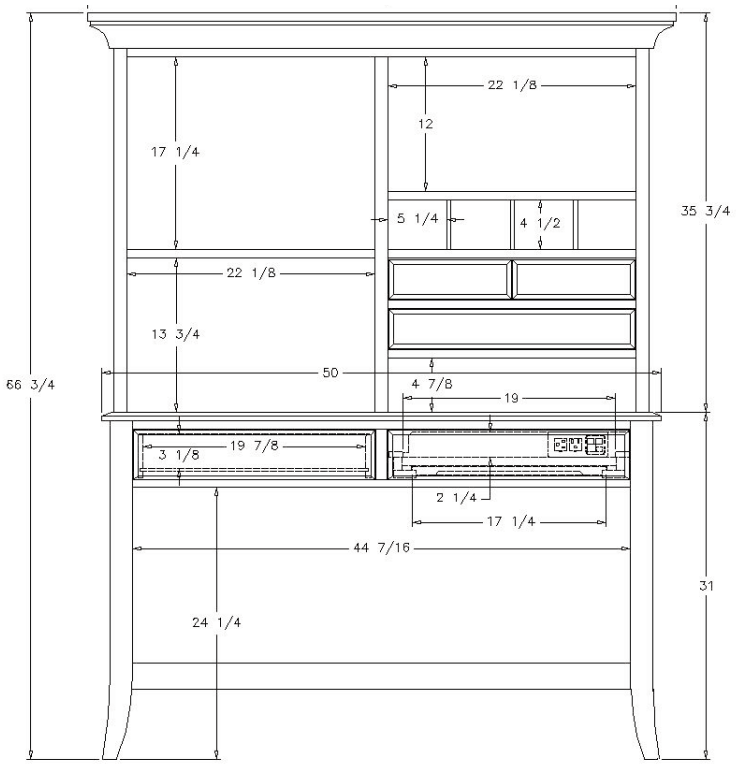

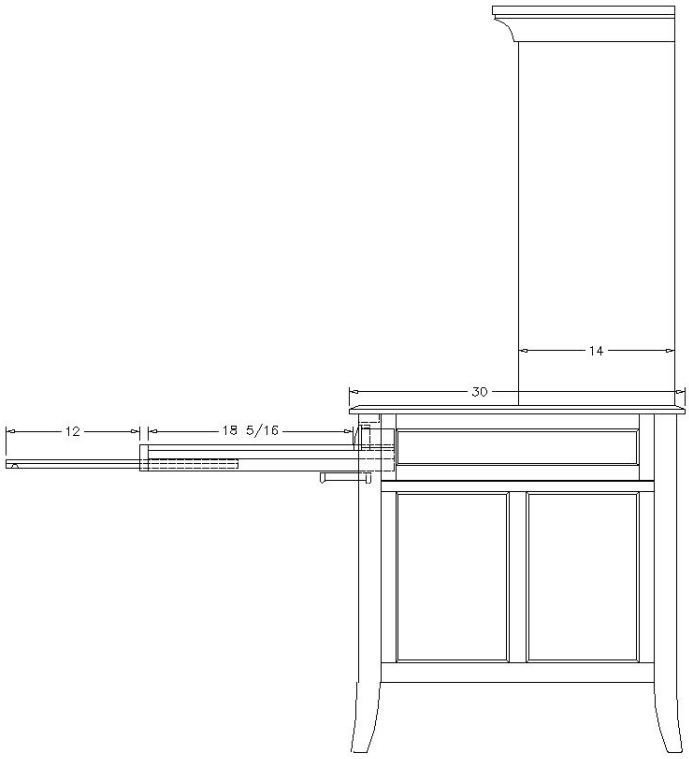

published 11/15/2007