Specification for **HSCKIT**

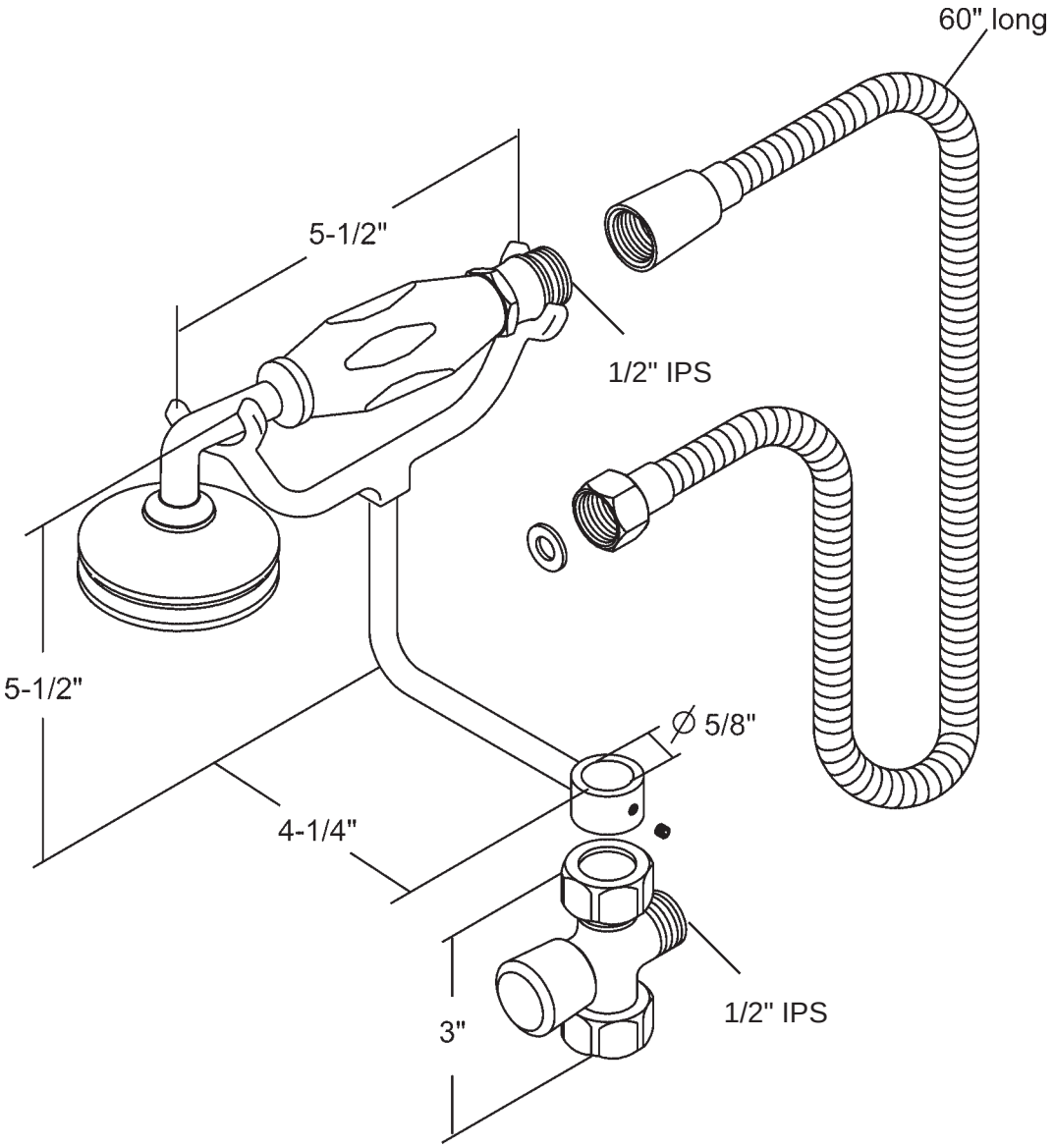

Revised 1/18/03