DECOLAV® Spec Sheet Model No. 4091 Series

Product Description

Wrought Iron Wall Mount Bracket

- Decorative Bracket
- Wrought Iron
- Wall Mount Faucet Only (not included)
- Glass Vessel Sold Separate

Product Measurements

- Width: 20.75 inches
- Depth: 17 inches
- Height: 4.5 inches
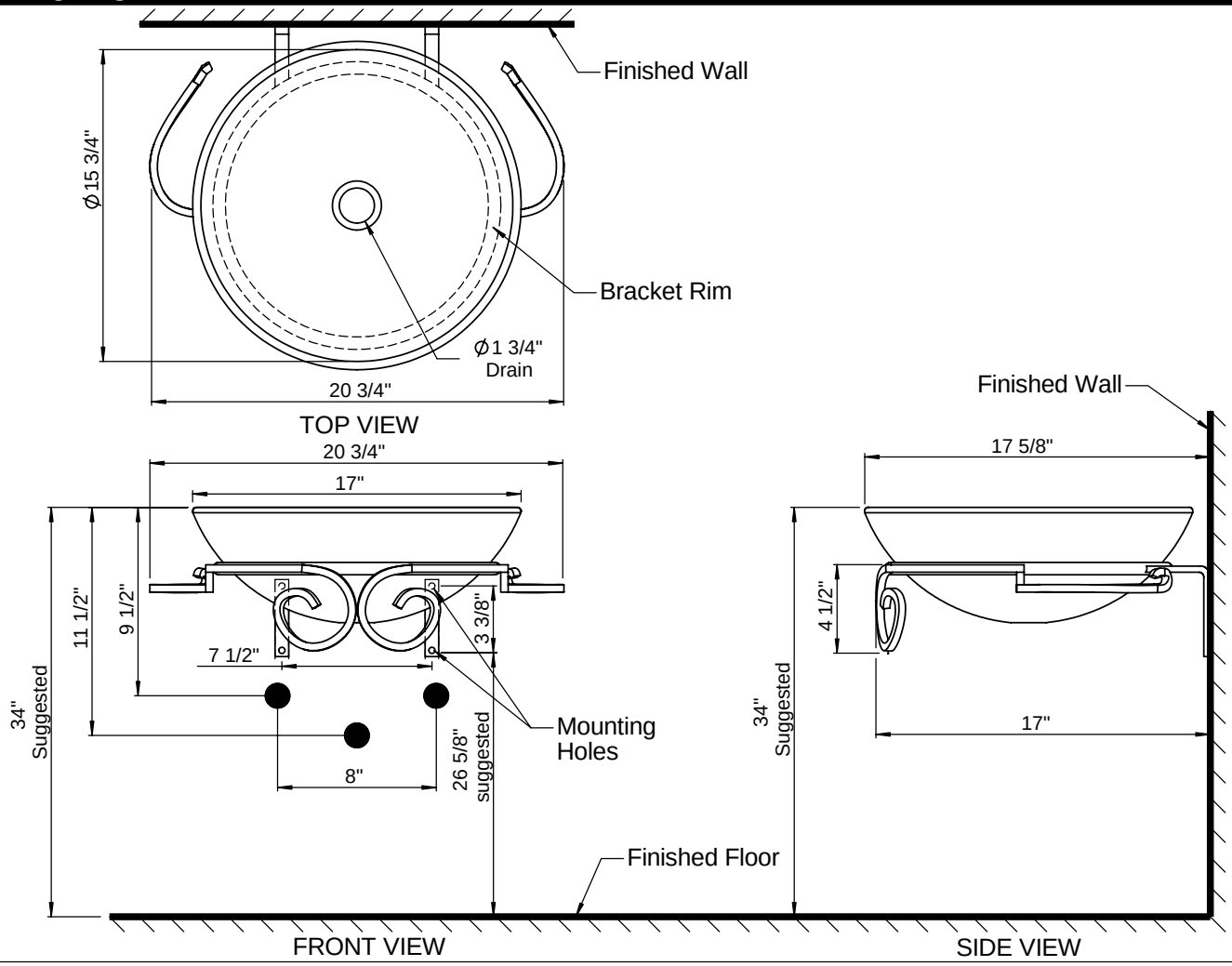
Roughing-in Dimension