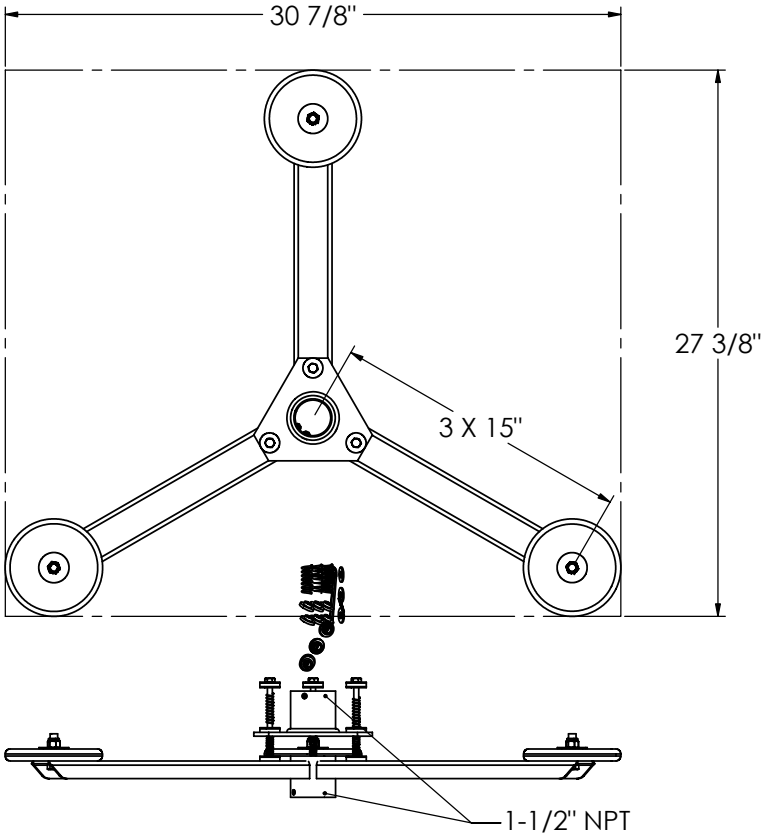

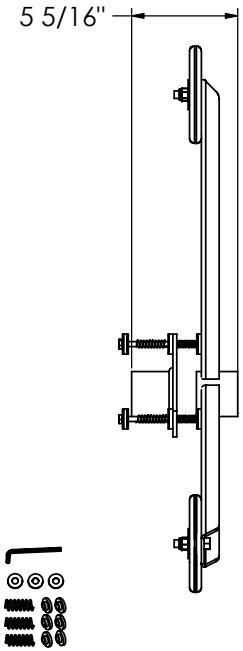

UPPER AND LOWER PORTION CAN BE SEPARATEDFOR EASE OF INSTALLATION

THE INFORMATION AND DESIGNS CONTAINED IN THIS DRAWING ARE CONFIDENTIAL AND THE PROPRIETARY PROPERTY OF CHIEF MFG., INC. NEITHER THIS DESIGN NOR ANY INFORMATION CONTAINED IN THIS DRAWING MAY BE REPRODUCED OR DISCLOSED TO OTHERS WITHOUT THE EXPRESS WRITTEN CONSENT OF CHIEF MFG., INC.

CHIEF MANUFACTURING, INC.
12800 HWY 13 S., STE. 500 * SAVAGE, MN 55378
P 952-894-6280 * F 877-894-6918

TITLE
CMA-347

SIZE	DWG. NO.	REV.
B		A