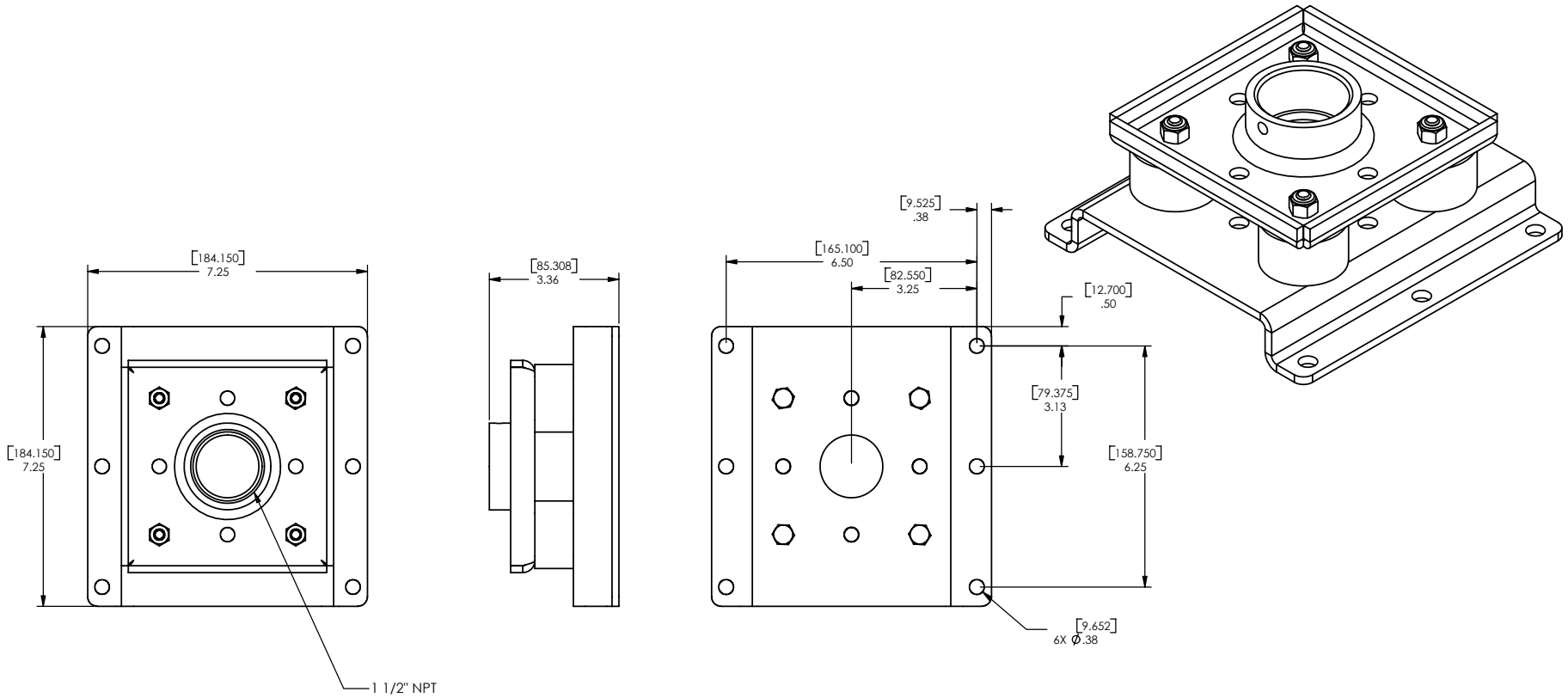

CHIEF MANUFACTURING INC.
MOUNT ORDER NUMBER IS CMA-345
PHONE: 1-800-582-6480

THE INFORMATION AND DESIGNS CONTAINED IN THIS DRAWING ARE CONFIDENTIAL AND THE PROPRIETARY PROPERTY OF CHIEF MFG., INC. NEITHER THIS DESIGN NOR ANY INFORMATION CONTAINED IN THIS DRAWING MAY BE REPRODUCED OR DISCLOSED TO OTHERS WITHOUT THE EXPRESS WRITTEN CONSENT OF CHIEF MFG., INC.

CHIEF MANUFACTURING, INC
12800 HWY 13 SOUTH STE. 500 * SAVAGE, MN 55378
1.800.582.6480 * fax 1.877.894.6918

TITLE
CUSTOMER PRINT
ASSEMBLY FLEX JOINT
CMA-345

SIZE **B** DWG. NO. **CMA-345**

CMA-345