PLEASE USE THIS INSTRUCTION SHEET

SOUTHERN ENTERPRISES INC.

BLK SQ TUBE SOFA TBL W/2 STOOLS
STYLE NO.CK4635

NOTE....This product has been engineered for easy assembly and constructed for durability
Now please take time to read through and follow assembly instructions.

HARDWARE LIST

1	2	3	4
ALLEN BOLT 32PCS	GLASS SUPPORT 6PCS	WOOD SCREW 8PCS	WRENCH 1PC

PARTS LIST

SOFA TABLE:

A	B	C
TOP FRAME 1PC	LEG 4PCS	GLASS 1PC

STOOL:

D	E	F
TOP FRAME 2PCS	LEG 8PCS	CUSHION 2PCS

Please count, identify and compare parts and hardware list to be sure all parts are present. It may help to divide parts and label them to correspond with part list. Extra hardware may be included. If may items are missing, please contact our parts/service department at(800) 633-5096 or in Dallas (972) 869-0111/ 9am - 4pm Mon-Fri Central time. Missing or damaged hardware and / or parts will be replaced free of charge. WE DO NOT SELL PARTS. WE DO NOT RECOMMEND MODIFYING PRODUCT(S) AND WE ARE NOT RESPONSIBLE FOR ANY DAMAGES DUE TO PRODUCT MODIFICATION(S). If this product has not been purchased from our retail affiliates (within 9 months), we are under no obligation to provide parts or replacement merchandise. Parts will not be available for items arrived fully assembled

PARTS REPLACEMENT FORM

STYLE NO: CK4635

Customer Name

PARTS LETTER	PARTS DESCRIPTION	QUANTITY NEEDED

Street, City, State, Zip

Phone#

Please indicate where you purchased this item.
Store/website/catalog

/ /

Please indicate color/ size/ style number.

/ /

SOUTHERN ENTERPRISES INC..
P.O. Box 59996 Dallas, Texas 75229

ASSEMBLY INSTRUCTION

DO NOT TIGHTEN ANY BOLTS BEFORE ASSEMBLY COMPLETED.

STEP 1: CAREFULLY OPEN THE BOX AND TAKE OUT TOP FRAME (A) AND LEGS (B) FROM THE BOX.

STEP 2: TURN THE TOP FRAME(A) UPSIDE DOWN, ATTACH LEGS (B) TO IT WITH ALLEN BOLTS (1) USING WRENCH (4) .

STEP 3: TURN THE TOP FRAME(A) AND THE LEGS UPRIGHT, INSERT THE GLASS SUPPORTS (2) INTO THE HOLES ON THE TOP FRAME(A).

STEP 4: TAKE GLASS (C) OUT FROM THE BOX AND SET IT ON THE GLASS SUPPORTS (2) .

STEP 5: AT THE SAME WAY, ATTACH THE LEGS(E) TO THE TOP FRAME (D) FOR STOOL .

STEP 6: ATTACH THE CUSHION(F) TO THE TOP FRAME(D) WITH WOOD SCREW(3) .

SOUTHERN ENTERPRISES, INC
P.O. Box 59996 Dallas, Texas 75229

ASSEMBLY INSTRUCTION

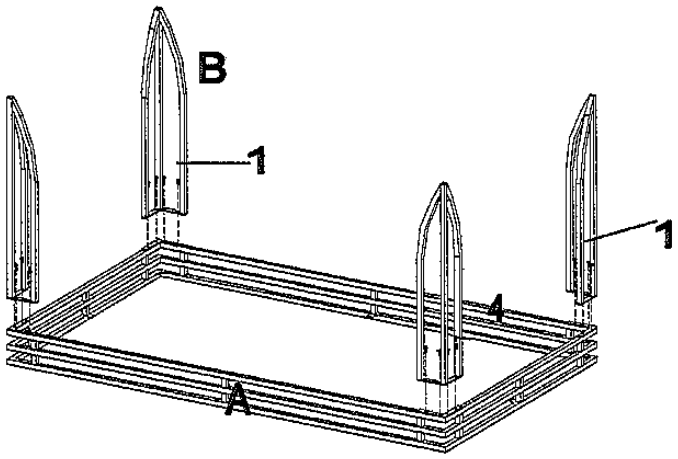

(SHOWN UPSIDE DOWN FOR ASSEMBLY PURPOSES)

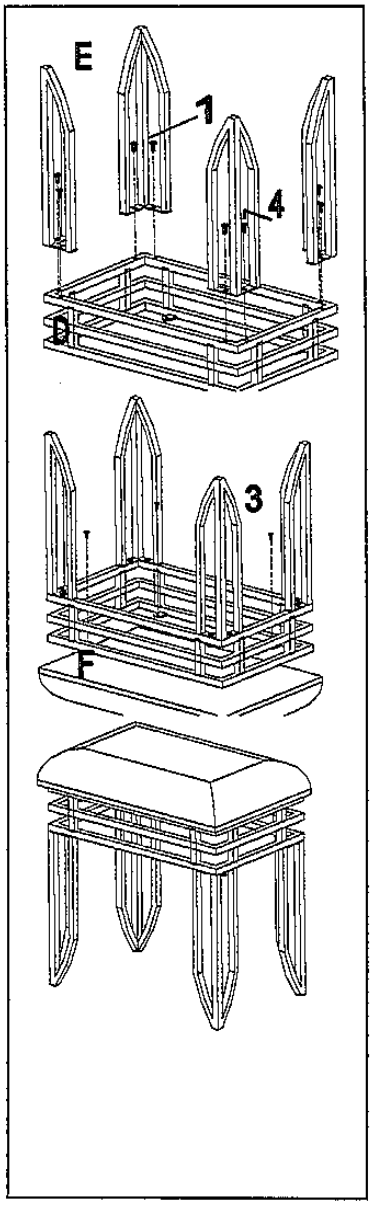

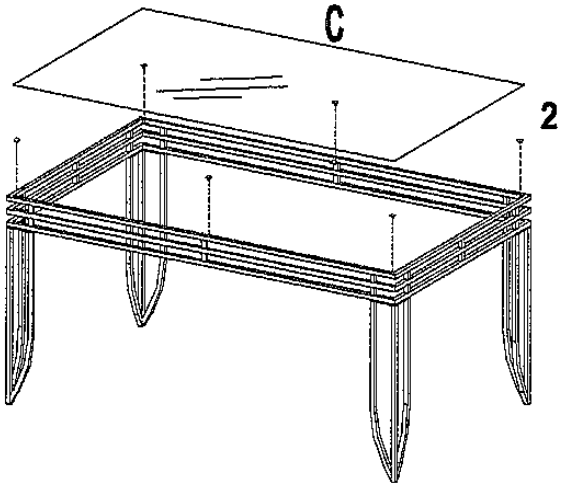

YOUR BEAUTIFUL BLK SQ TUBE SOFA TBL W/2 STOOLS IS FINISHED AND READY TO USE.

THIS PRODUCT IS NOT INTENDED FOR COMMERCIAL USE

SOUTHERN ENTERPRISES, INC
P.O. Box 59996 Dallas, Texas 75229