MODEL: 7803

High-Back Managerial Task, Swivel Tilt, Tilt Lock, Pneumatic, Posture Back, Height Adjustable Post Arm

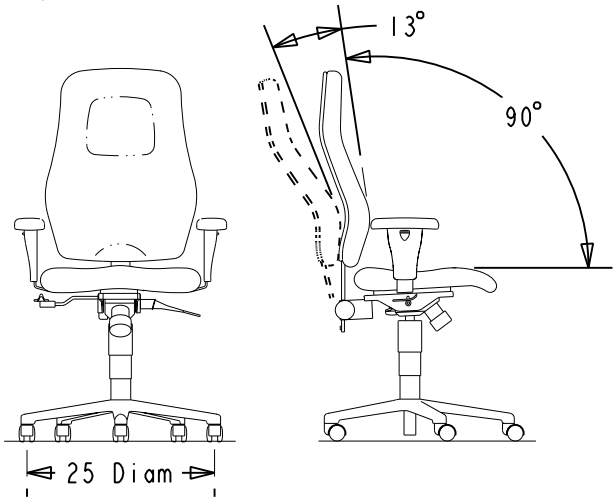

CHAIR SPECIFICATIONS

Max. Width	27-1/2
Max. Depth	26-1/2
Max. Height	46-1/2
Seat Size	
Width	21-1/2
Depth	18
Usable Depth	16-1/2
Height from Floor	16-1/2 - 22
Back Size	
Width	19-3/4
Height	25
Height from Seat	24-1/4 - 25-3/4
Arm Size	
Width	3-3/4
Distance between arms	18-1/2 - 22-1/4
Height from floor	24-1/2 - 29-1/2
Height from seat	8 - 10-1/2
Width	3-3/4

CONSTRUCTION

Caster	2" diameter hooded dual wheel.
Optional Caster	See Dealer Net Pricer.
Base	5 leg black base arms are 16 gauge formed steel with base cap.
Control	Black heavy gauge steel, swivel tilt, tilt lock, separate lever for back articulation, 17-4 taper.
Seat	5/8" thick, composite wood product, 2-1/2" thick molded urethane foam cushion.
Back	1/2" thick, 5-ply curved plywood, 3" thick urethane foam cushion.
Arm	Steel with plastic shell, built in height adjustment and urethane arm pad. Each arm is independently height/width adjustable.
Upholstery	See Dealer Net Pricer. Customer own material (COM) required yardage per SKU = 3.0 yards. Vinyl and Leather not available.
Chair Weight	52 pounds.
Shipping Weight	62 pounds.
Shipped	Completely assembled.
Shipping Size	29-1/16" wide x 25-9/16" deep x 42-3/16" high (18.2 cubic feet).
Flammability Rating	Furnished upon request by the HON Company Customer Service.
Special Features	A pneumatic gas cylinder is used for seating height adjustment of chair. The back height is adjustable.
Note	All measurements are per BIFMA/CMD procedures.

Issue Date: 08-26-03

Part Number: 53-4273D